ADAPTER KIT TO POWER TAKE OFFS
ZF

12-AS-1800; 12-AS-2301; 16-AS-2200; 16-AS-2601; 12AS-1630TD; 12AS-1930TD; 12AS-2130TD; 12AS-2131TD; 12AS-2140TD; 12AS-2340TD; 12AS-2430TD; 12AS-2540 TD; 12AS-1930 TO; 12AS-2130 TO; 12AS-2330 TO; 12AS-2530 TO; 12AS-2540 TO; 12AS-2740 TO; 12AS-2940 TO; 16AS-2230 TD; 16AS-2601 DD; 16AS-2601 OD; 16AS-2630 TO

Ref. VK4022S
VK4022AM

Main Dimensions

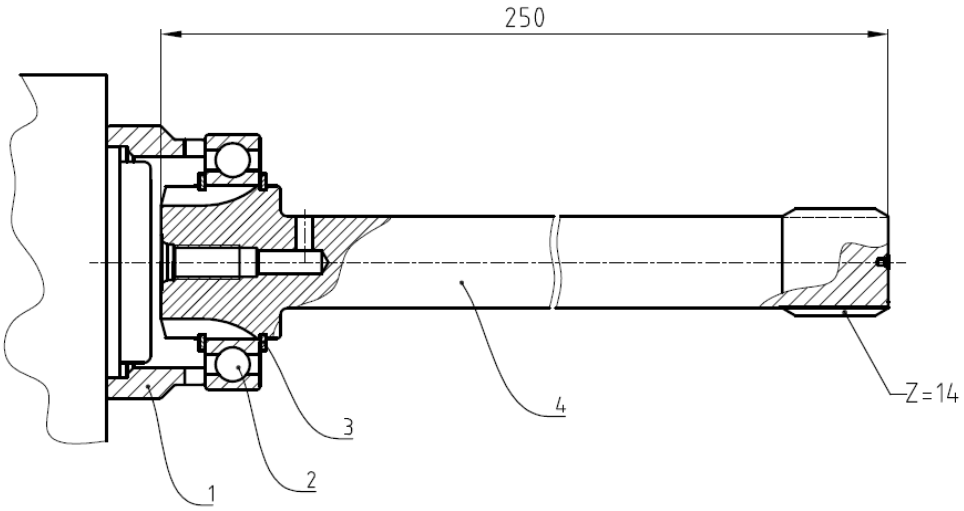

1 – Spacer
2 – Bearing
3 – Circlip
4 – Adapter shaft VK4022

(Dimensions in mm)

Main Data	
Continuous Torque (Nm)	**600**
Intermittent Torque (Nm)	**840**
Power (at 1000 r.p.m)	**85 H.P. / 64 Kw**
Weight (Kg)	**2**
Engine-Kit adapter ratio	

Note : Adapter Kit is supplied without studs.Please use those that are provided with the PTO.