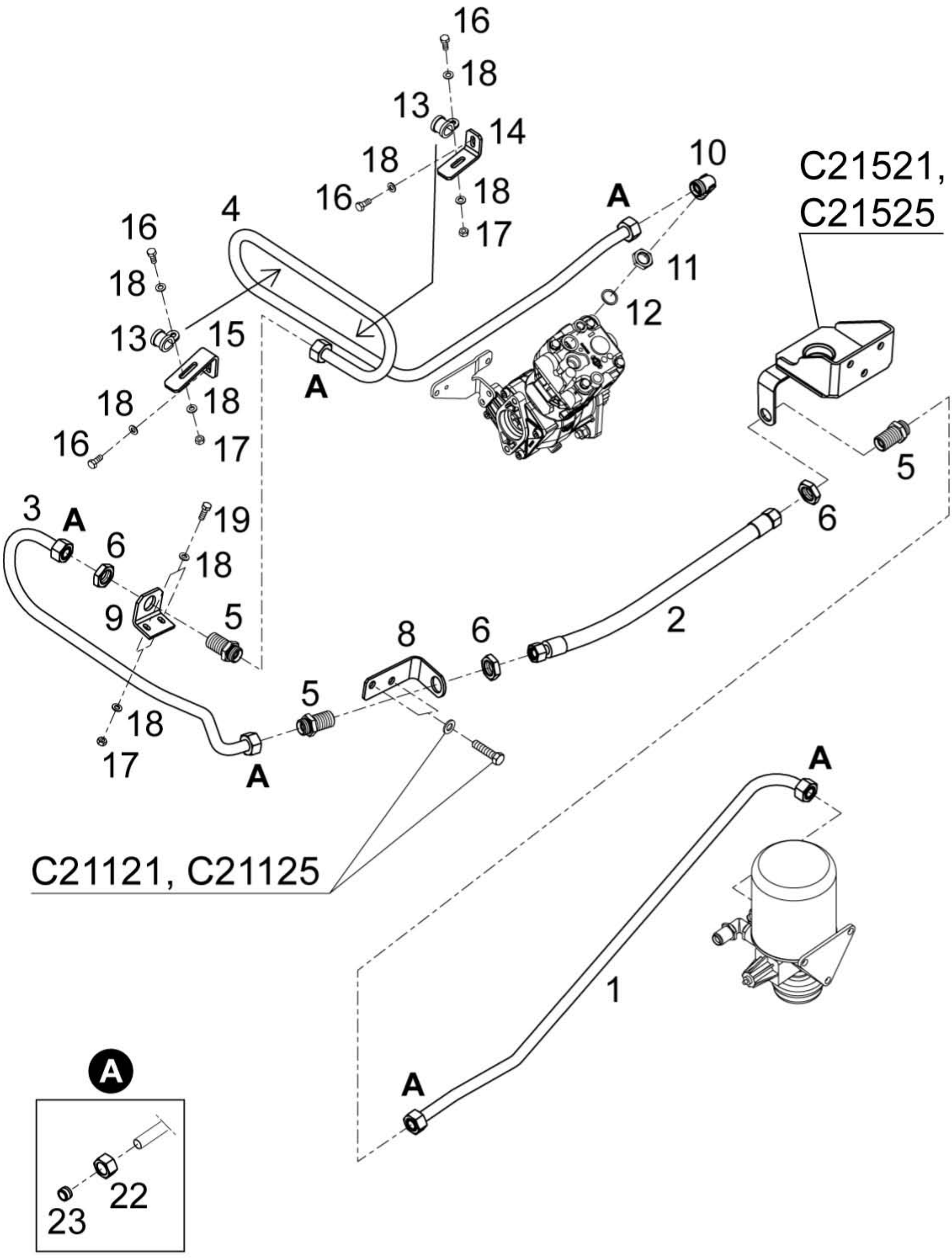
16
18
13
14
18
16
18
17
10
A
4
16
18
13
15
11
12
A
18
18
16
17
C21521,
C21525
5
3
A
6
19
18
9
5
6
2
8
6
5
18
17
A
A
C21121, C21125
1
A
A
22
23