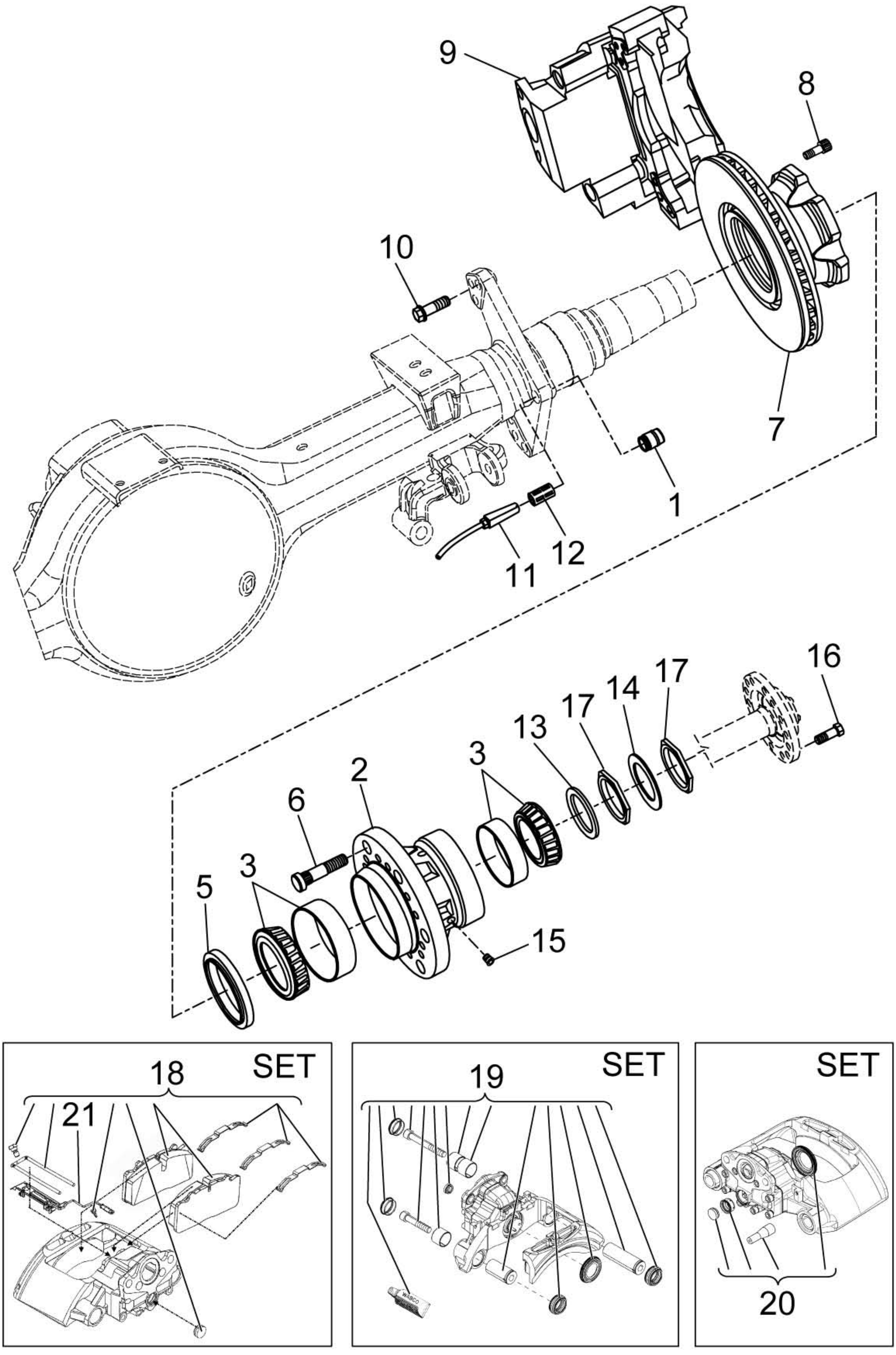
9
8
10
7
1
12
11
16
17
14
17
13
3
2
6
3
5
15
18
SET
21
19
SET
WABCO
SET
20