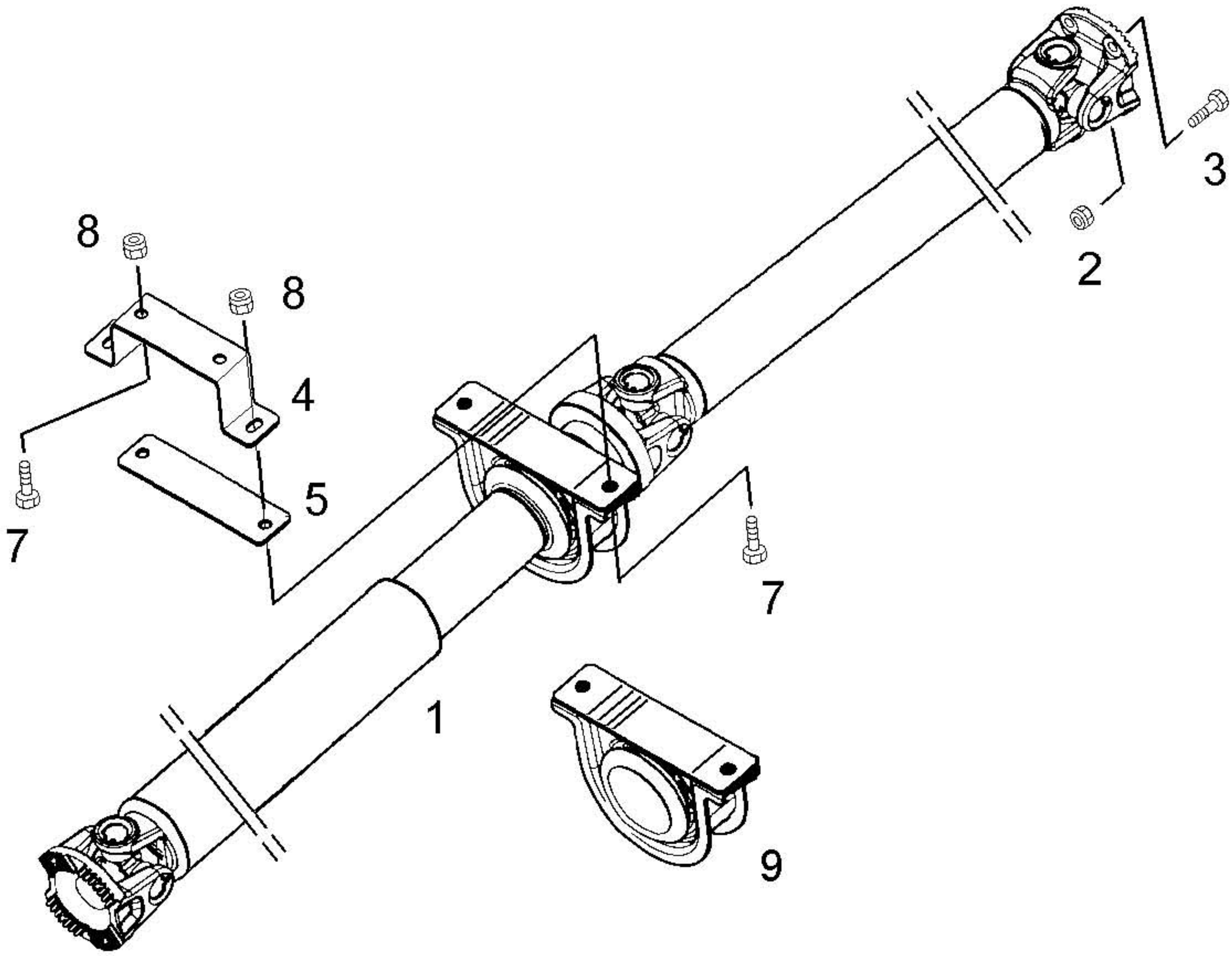
8
8
4
5
7
7
1
9
2
3

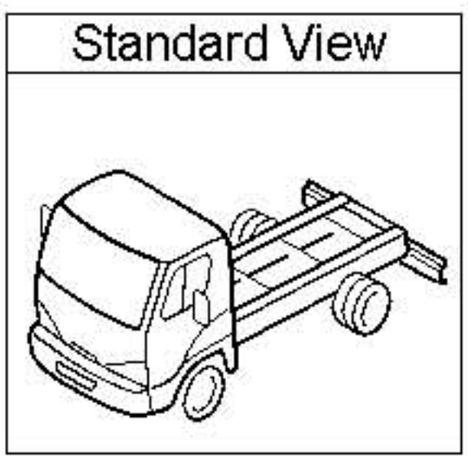
Standard View