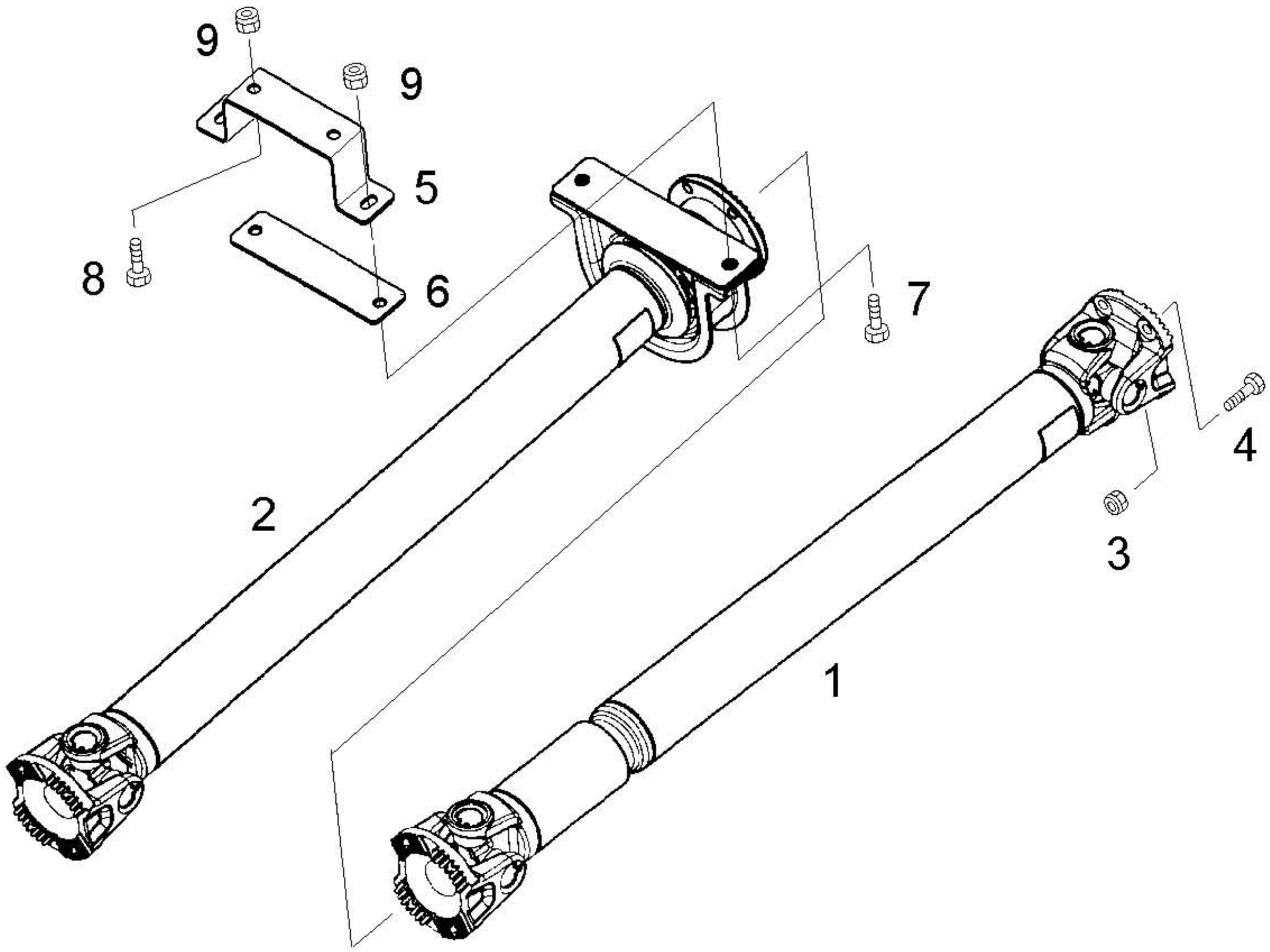
9
9
5
8
6
7
4
2
3
1

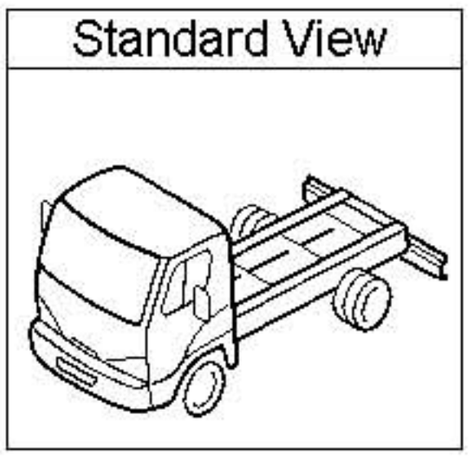
Standard View