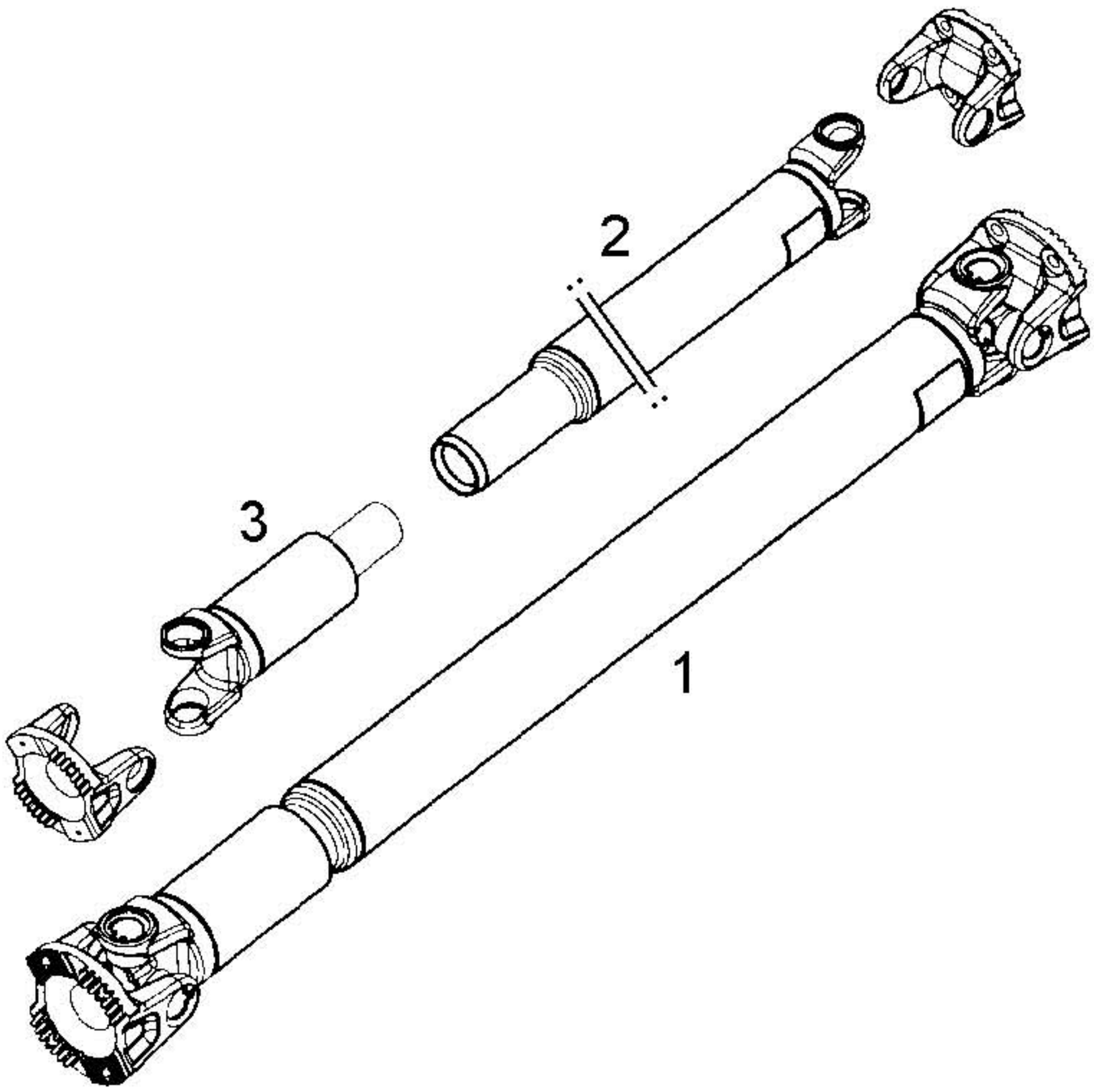
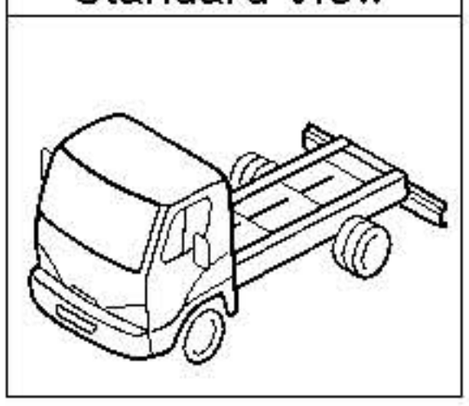
Standard View