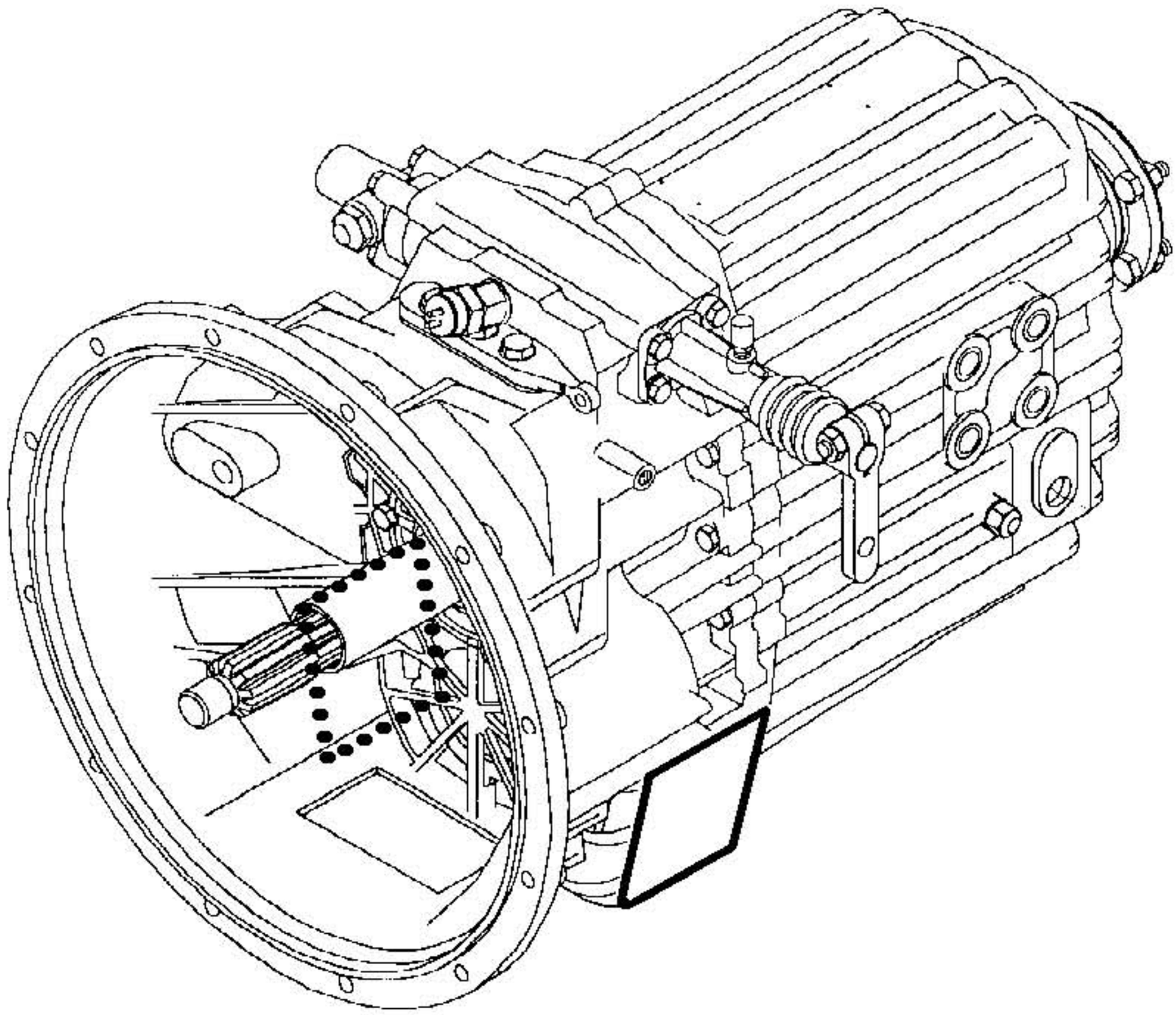

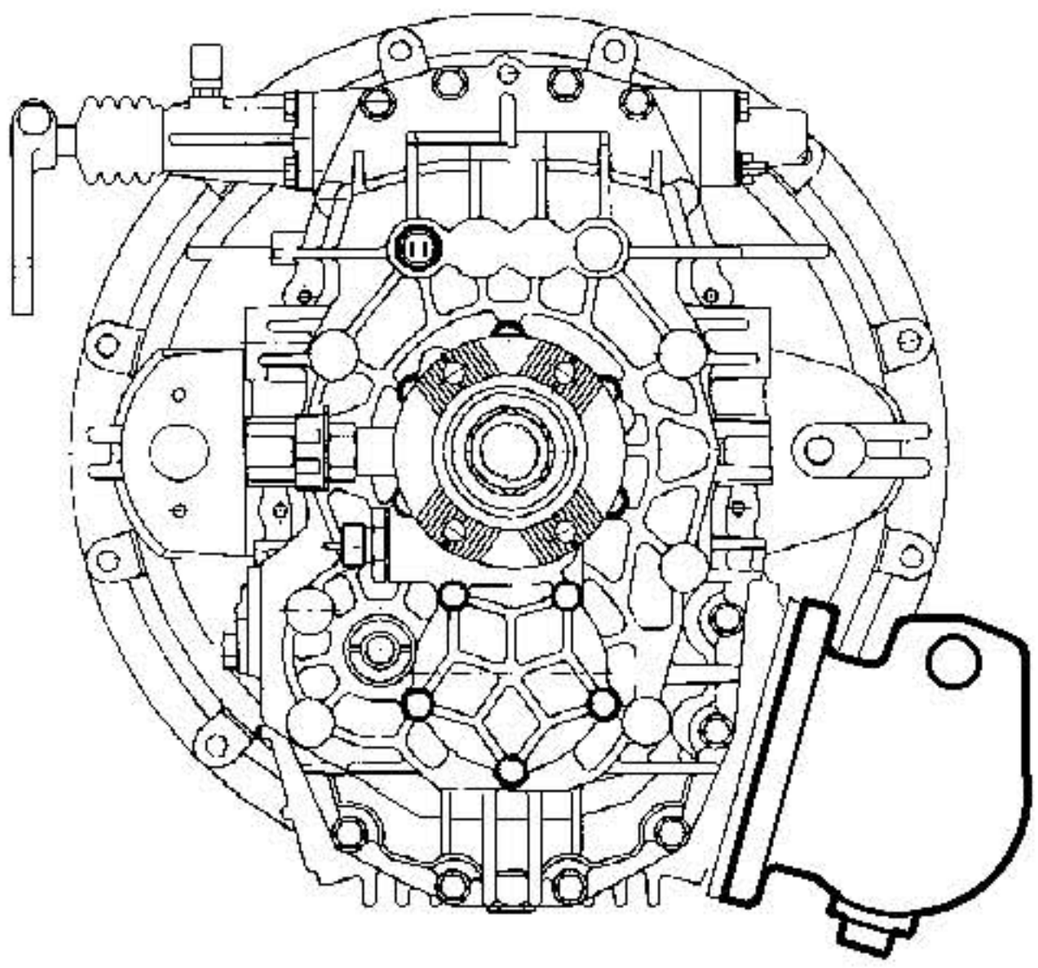

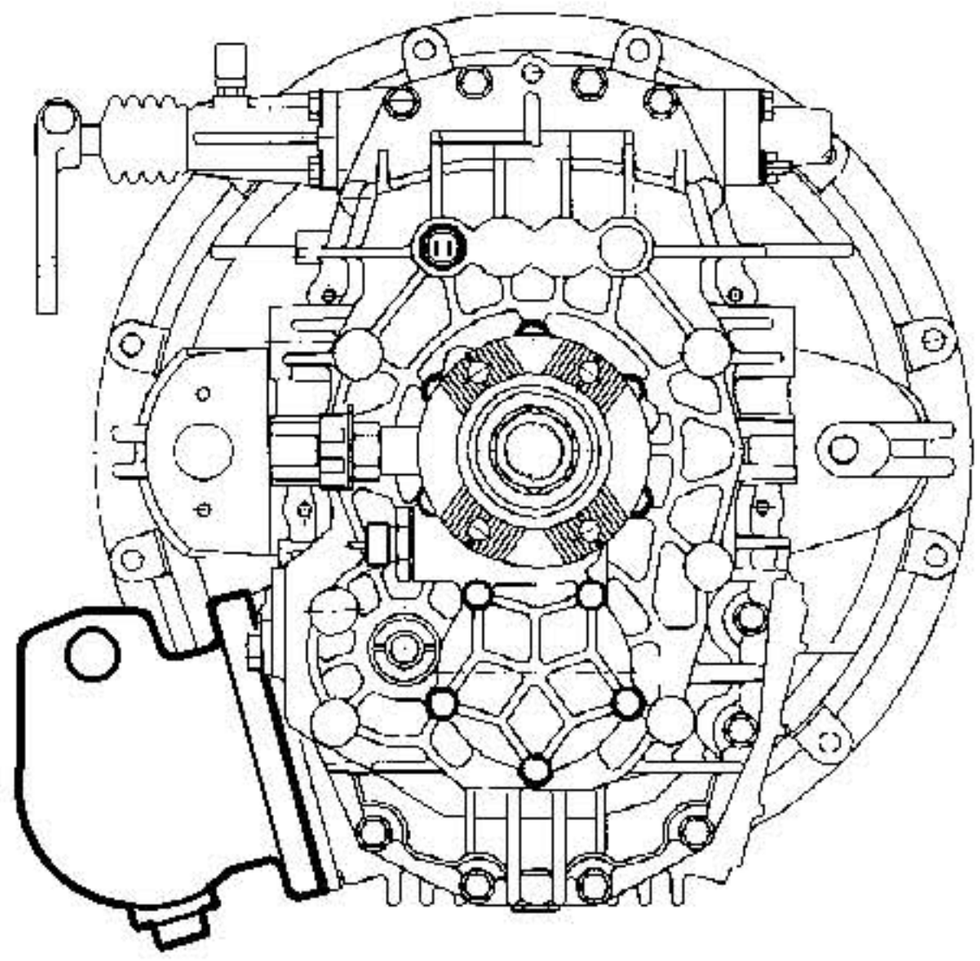

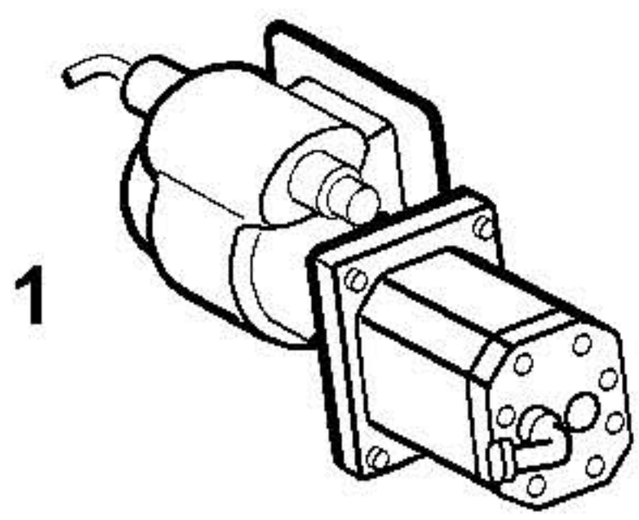

1