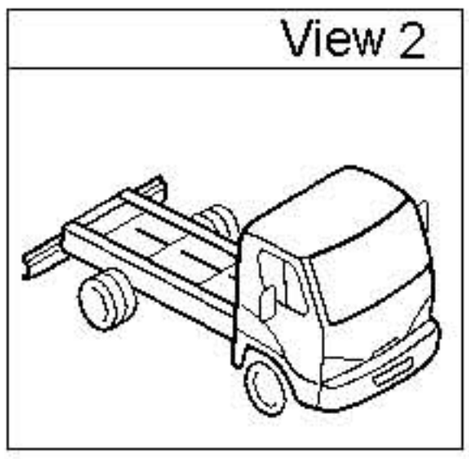
View 2

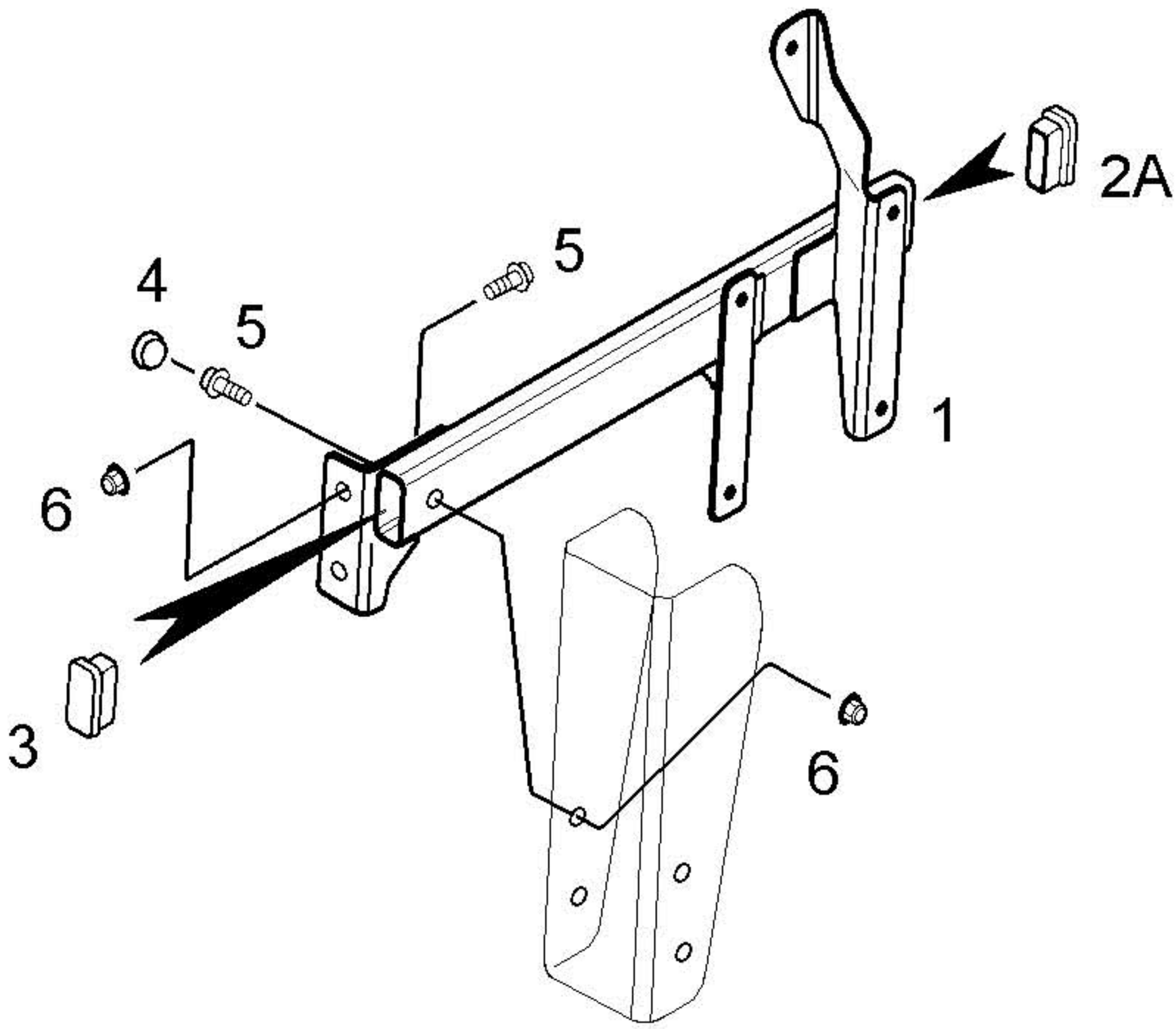
2A
5
4
5
1
6
3
6

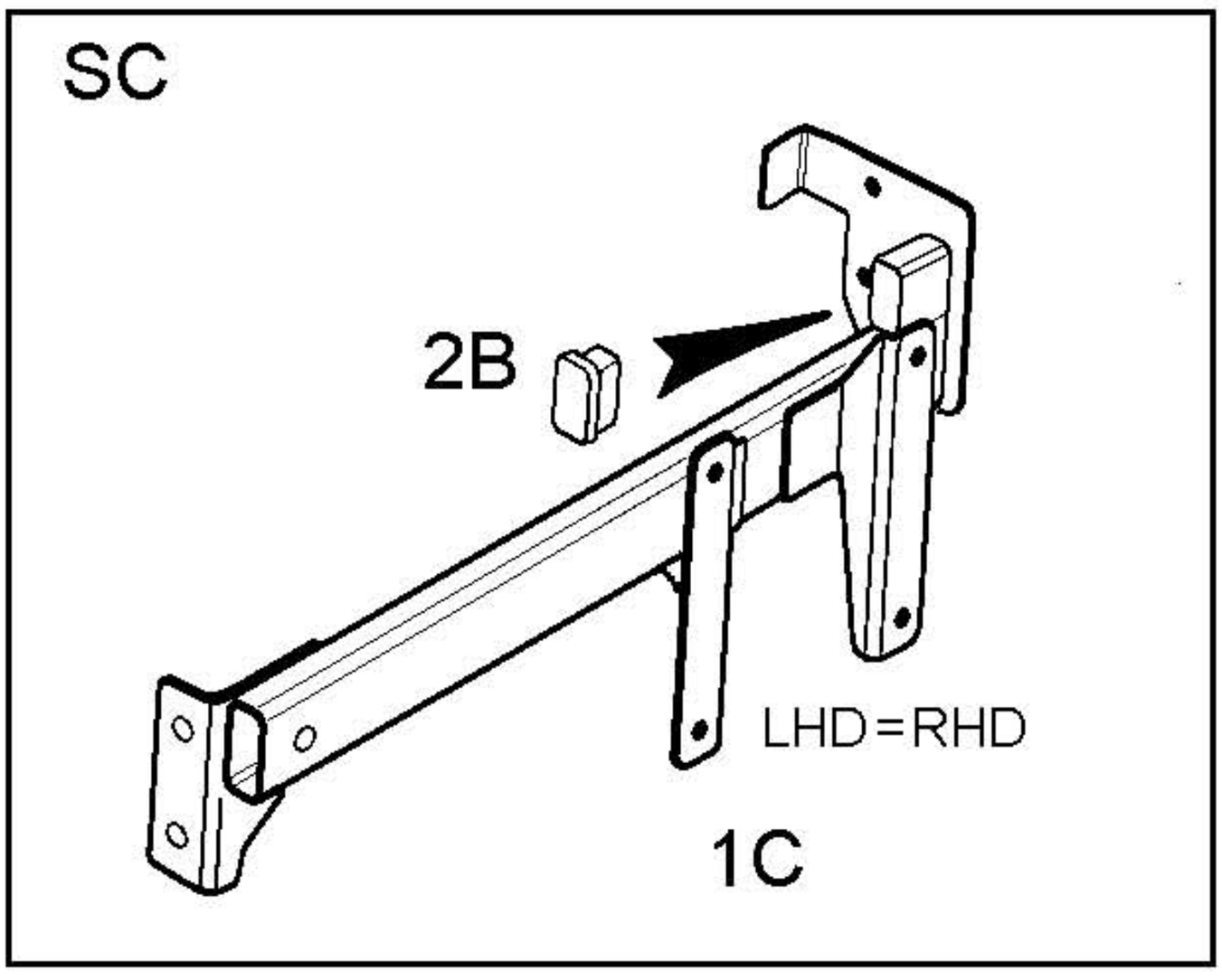
SC
2B
LHD=RHD
1C